PD663

Explosion-Proof NEMA 4X IP68 Loop-Powered Meter

90° Rotatable Display

ProtEx™ Lite

2663

Actual Size Digits

FM APPROVED

Explosion-Proof / Flame-Proof

PROCESS METER

- Fully-Approved Explosion-Proof Loop-Powered Meter
- 4-20 mA Input with ±0.05% Accuracy of Calibrated Span
- 1.7 Volt Drop (4.7 Volt Drop with Backlight)
- Easy Field Scaling in Engineering Units without a Calibrator
- 0.6" (15.2 mm) 3½+ Digits LCD Display; -1999 to 2999
- Display Mountable at 0°, 90°, 180°, & 270°
- HART® Protocol Transparent
- Loop-Powered Backlight Option
- Operating Temperature Range: -40 to 75°C (-40 to 167°F)
- Four Internal Buttons for Easy Field Scaling
- Max/Min Display
- Programmable Noise Filter
- 32-Point Linearization & Square Root Extraction
- FM Approved as Explosion-Proof / Dust-Ignition Proof / Flame-Proof
- CSA Certified as Explosion-Proof / Dust-Ignition Proof / Flame-Proof
- ATEX and IECEx Certified as Flame-Proof and Protection by Enclosure
- Conformal Coated PCBs for Dust and Humidity Protection
- Flanges for Wall or Pipe Mounting
- Explosion-Proof, IP68, NEMA 4X Die-Cast Aluminum Enclosure
- Two ½" NPT Threaded Conduit Openings (One Plug Installed)
- 1.5" U-Bolt Kit & 2" Pipe Mounting Kits Available
- Stainless Steel Tag Available
- 3-Year Warranty

OVERVIEW

The PD663 is a loop-powered field meter that is FM Approved and CSA Certified as Explosion-Proof, Dust-Ignition Proof, and Flame-Proof, and ATEX & IECEx Certified as Flame-Proof and Protection by Enclosure. The PD663 is easy to install and program and it can be seen in a variety of lighting conditions and even in bright sunlight. The fact that this meter is loop-powered means that there is no need to run additional, costly power lines into a hazardous area. The meter gets all of the power it needs from the 4-20 mA loop and its 1.7 V drop results in a minimal burden on the loop. The meter features a wide -40 to 75°C operating temperature range and comes with two 1/2" NPT threaded conduit openings and flanges for wall or pipe mounting. Calibration is a quick process involving the four internal pushbuttons. The PD663's display will read up to 2999; we call this 3½+ digits!

Programming

The PD663 comes calibrated and scaled at the factory to display a 4.00 to 20.00 mA signal on startup. To change the scaling, follow along using the 4 button interface.

Electronics Module

The PD663 electronics module is housed in a plastic enclosure that provides a degree of environmental protection for the electronics circuitry. The module is mounted to the enclosure with spring-loaded thumbscrews and can be oriented in 0°, 90°, 180°, or 270° increments. Connections are made to a removable screw terminal block.

PD663 Electronics Module

Back Cover & Connector

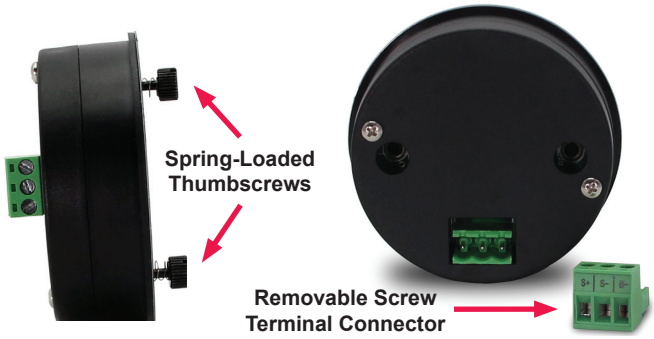

DIMENSIONS

All units: Inches (mm)

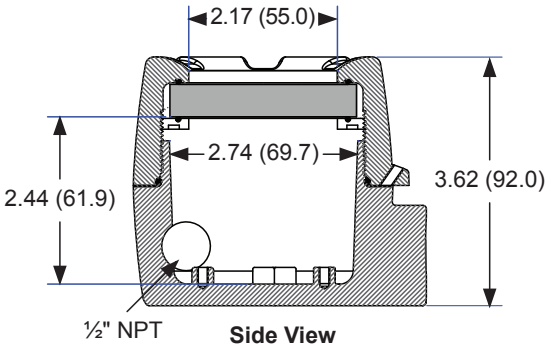

Side View

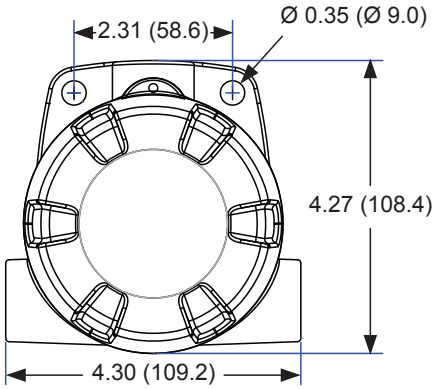

Front View

ENCLOSURE CAD DIMENSIONAL DRAWINGS
Download free 3-D CAD files of these instruments to simplify your drawings!
predig.com/documentation-cad

CONNECTIONS

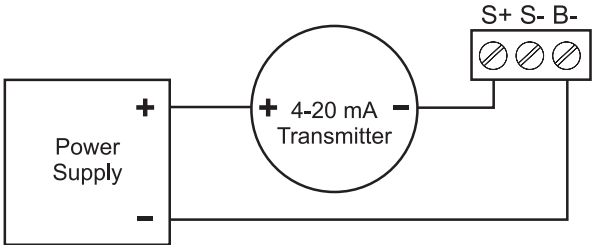

PD663 Input Connections with Backlight

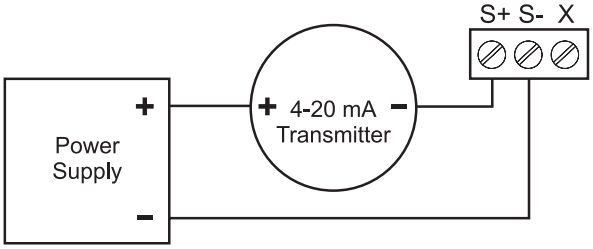

PD663 Input Connections without Backlight

SPECIFICATIONS

Except where noted all specifications apply to operation at +25°C.

General

Display: 0.6" (15.2 mm) LCD, 3½+ digits; -1999 to 2999
Display Update Rate: 2 updates/second
Display Orientation: Display may be mounted at 90° increments up to 270° from default orientation.
Overrange: Display flashes 2999
Underrange: Display flashes -1999
Programming Method: 4 Internal pushbuttons (behind glass).
Noise Filter: Programmable HI, LO, or OFF
Recalibration: Recalibration is recommended at least every 12 months.
Max/Min Display: Max/Min readings reached by the process are stored until reset by the user or until power to the meter is turned off.
Non-Volatile Memory: All programmed settings are stored in non-volatile memory for a minimum of ten years if power is lost.
Normal Mode Rejection: 64 dB at 50/60 Hz
Environmental: Operating temperature range: -40 to 75°C
Storage temperature range: -40 to 75°C
Relative humidity: 0 to 90% non-condensing.
Printed circuit boards are conformally coated.
Connections: Removable screw terminals accept 12 to 22 AWG wire
Enclosure: Explosion-proof die cast aluminum with glass window, 0.30% max copper content, corrosion resistant epoxy coating, color: blue. NEMA 4X, 7, & 9, IP68.
Two ½" NPT threaded conduit openings.
One ½" NPT nickel plated brass conduit plug with 10 mm hex key fitting installed.
Mounting: May be mounted directly to conduit. Two mounting holes for 1.5" pipe or wall mounting.
Tightening Torque: Screw terminal electrical connectors: 4.5 lb-in (0.5 Nm)
Overall Dimensions: 4.84" x 4.29" x 3.62" (123 mm x 109 mm x 92 mm) (W x H x D)
Weight: 2.45 lbs (40 oz, 1.13 kg)
Warranty: 3 years parts and labor. See Warranty Information and Terms & Conditions on www.predig.com for complete details.

Input

Input: 4-20 mA
Accuracy: ±0.05% of calibrated span ±1 count
Function: Linear (2 to 32 points) or square root
Temperature Drift: 50 PPM/°C from -40 to 75°C ambient
Decimal Point: User selectable decimal point
Minimum Span: Input 1 & Input 2: 0.40 mA
Calibration Range: An *Error* message will appear if input 1 and input 2 signals are too close together.

Input Range	Minimum Span Input 1 & Input 2
4-20 mA	0.40 mA

Maximum Voltage Drop & Equivalent Resistance:

Without Backlight	With Backlight
1.7 VDC @ 20 mA	4.7 VDC @ 20 mA
85 Ω @ 20 mA	235 Ω @ 20 mA

Loop-Powered Backlight Option: Factory installed only. Powered directly from the 4-20 mA loop, no batteries required. Backlight can be enabled or disabled via alternative wiring of terminal block. The display brightness will increase as the input signal current increases.
Input Overload: Over current protection to 2 A max.
HART Transparency: The meter does not interfere with existing HART communications; it displays the 4-20 mA primary variable and it allows the HART communications to pass through without interruption. The meter is not affected if a HART communicator is connected to the loop. The meter does not display secondary HART variables.

Product Ratings & Approvals

FM: Explosion-proof for use in:
Class I, Division 1, Groups B, C and D
Dust-ignition proof for use in:
Class II/III, Division 1, Groups E, F and G; T6
Flame-proof for use in:
Class I, Zone 1, AEx d Group IIC; T6
Protection by Enclosure:
Zone 21, AEx tb IIIC; T85°C
Ta = -40 to 75°C.
Enclosure: Type 4X, IP66.
Certificate number: 3040391
CSA: Explosion-proof for use in:
Class I, Division 1, Groups B, C and D
Dust-ignition proof for use in:
Class II/III, Division 1, Groups E, F and G; T6
Flame-proof for use in:
Zone 1, Ex d IIC T6
Ta = -40 to 75°C.
Enclosure: Type 4X & IP66/IP68.
Certificate number: 2325749
ATEX: II 2 G D. Flame-proof for use in:
Zone 1, Ex d IIC T6 Gb
Protection by Enclosure for use in:
Dust Atmospheres (Zone 21)
Ex tb IIIC T85°C Db IP68.
Ta = -40°C to +75°C
Certificate number: Sira 10ATEX1116X
IECEx: Flame-proof for use in:
Zone 1, Ex d IIC T6 Gb
Protection by Enclosure for use in:
Dust Atmospheres (Zone 21)
Ex tb IIIC T85°C Db IP68.
Ta = -40°C to +75°C
Certificate number: IECEx SIR 10.0056X

ORDERING INFORMATION

ProtEX-Lite PD663 • Explosion-Proof Process Meter	
Model	**Options Installed**
PD663-0L0-00	None
PD663-0K0-00	Loop-Powered Backlight

Accessories	
Model	**Description**
PDA0003	½" M-NPT to ¾" F-NPT Adapter
PDA1024-01	24 VDC Power Supply for DIN Rail
PDA6631	Steel 1.5" U-Bolt Kit. All Material: Zinc Plated Steel; (1) U-Bolt for 1.5" Pipe with (2 each) Washers, Lock Washers, and Nuts.
PDA6631-SS	Stainless Steel 1.5" U-Bolt Kit. All Material: Stainless Steel; (1) U-Bolt for 1.5" Pipe with (2 each) Washers, Lock Washers, and Nuts.
PDA6863	Steel 2" Pipe Mounting Kit. All Material: Zinc Plated Steel; (1) Plate with (2 each) Bolts, Washers, Lock Washers & Nuts to Mount Meter. (1) U-Bolt for 2" Pipe with (2 each) Washers, Lock Washers & Nuts.
PDA6863-SS	Stainless Steel 2" Pipe Mounting Kit. All Material: Stainless Steel; (1) Plate with (2 each) Bolts, Washers, Lock Washers & Nuts to Mount Meter. (1) U-Bolt for 2" Pipe with (2 each) Washers, Lock Washers & Nuts.
PDA-SSTAG	Custom Stainless Steel Tag (see predig.com for convenient ordering form)

Your Local Distributor is:

Disclaimer

The information contained in this document is subject to change without notice. Precision Digital Corporation makes no representations or warranties with respect to the contents hereof, and specifically disclaims any implied warranties of merchantability or fitness for a particular purpose.

©2021 Precision Digital Corporation. All rights reserved.

WARNING
Cancer and Reproductive Harm - **www.P65Warnings.ca.gov**

LDS663_I 03/21

PRECISION DIGITAL CORPORATION
233 South Street • Hopkinton MA 01748 USA • Tel (800) 343-1001
www.predig.com