SNI with Quick Connect Sanitary Non-Intrusive

Ordering Information

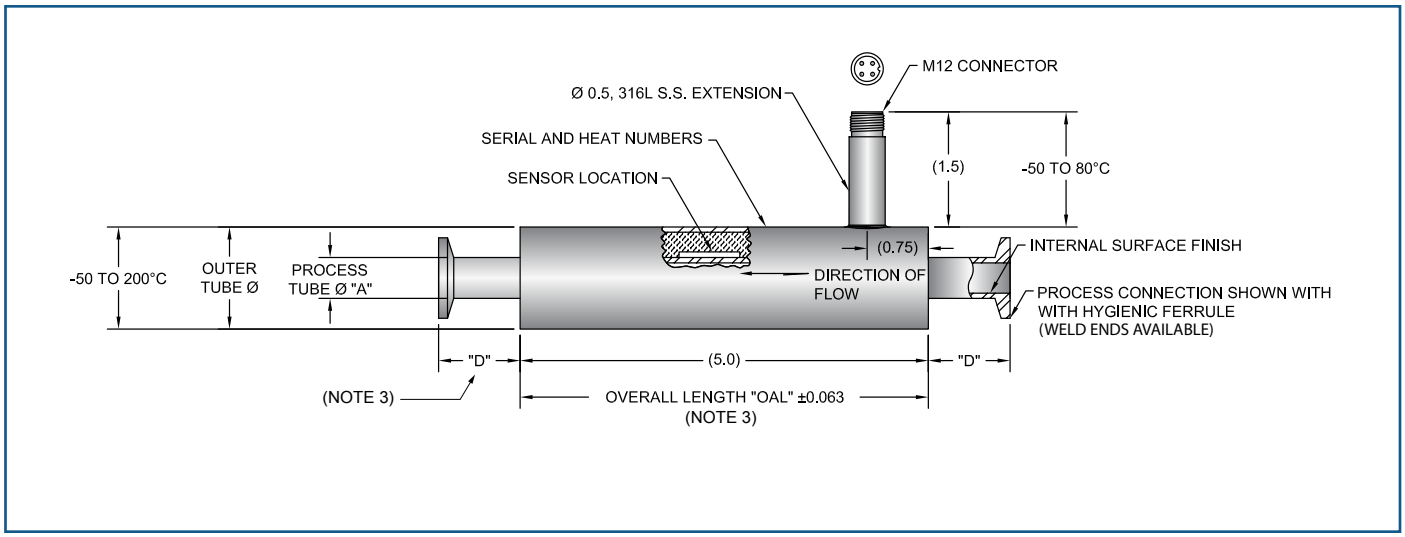

All dimensions in inches

Sensor Type

SNI	Sanitary Non-Intrusive (Note 1)

RTD Accuracy

10	Standard +/-0.10% of Resistance at 0 Degrees C
05	Precision +/-0.05% of Resistance at 0 Degrees C

Sensor Element Lead Construction

A	Three Wire Single
B	Four Wire Single

Connection

-M12	M12 Connector (Note 2)

Process Tube Ø "A"		Wall Thickness	Outer Tube Ø	Process Connection Length "D" for Weld Ends	Overall Length for Weld Ends
0250	0.250"	0.032"	1.25"	1.75"	8.50"
0500	0.500"	0.065"	1.25"	1.75"	8.50"
0750	0.750"	0.065"	2.0"	1.75"	8.50"
1000	1.000"	0.065"	3.0"	1.75"	8.50"
1250	1.250"	0.065"	3.0"	1.75"	8.50"
1500	1.500"	0.065"	3.0"	1.75"	8.50"
2000	2.000"	0.065"	4.0"	1.75"	8.50"
2500	2.500"	0.065"	4.0"	1.75"	8.50"
3000	3.000"	0.065"	6.0"	2.00"	9.00"
4000	4.000"	0.085"	6.0"	2.13"	9.25"

Process Tube Material

-06	316L Stainless Steel
-20	AL6XN

Internal Finish

A	32 Ra Mechanical Finish
B	10 Ra Electropolish
N	Standard Pipe Finish, Mechanical, Not Available with 3A

External Finish

1	Sand Blasted
2	Bright Mechanical (32 Ra Surface Finish)

Process Connection Fitting (Note 3)

C	Hygienic Ferrule
N	Weld Ends No Process Connection

Process Connection Size "C"		Compatible W/ Tube Sizes
050	1/2"	0500, 0750
150	1 1/2"	1000, 1500
200	2"	2000
250	2 1/2"	2500
300	3"	3000
400	4"	4000
	Weld Ends, No Process Connection, Leave Blank	

Process Connection Material

-06	316L S.S.
-20	AL6XN
	Weld Ends, Leave Blank

SNI										

Basic Order Codes

Example Part # SNI-05AM120500-06A2C050-06

Note 1: See Burns "Series S" catalog for additional product details.
Note 2: Currently available with 3-wire and 4-wire only. For mating cordsets see models C01, C02, and C03
Note 3: For assemblies with hygienic ferrules, the "OAL" length is 8.0 inches and the "D" length is 1.5 inches